left

File: left.kicad_sch

right

File: right.kicad_sch

Sheet: /
File: Splitix MK1.kicad_sch

Title:

Size: A4	Date:	**Rev:**
KiCad E.D.A. 9.0.7		Id: 1/3

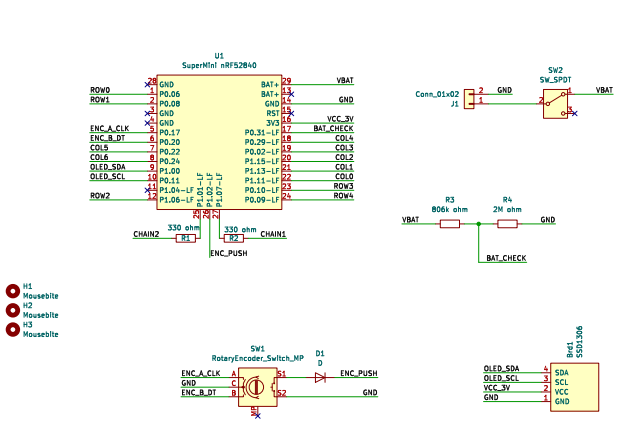

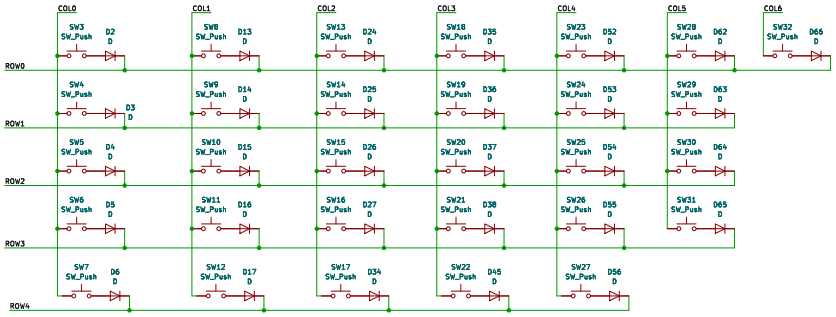

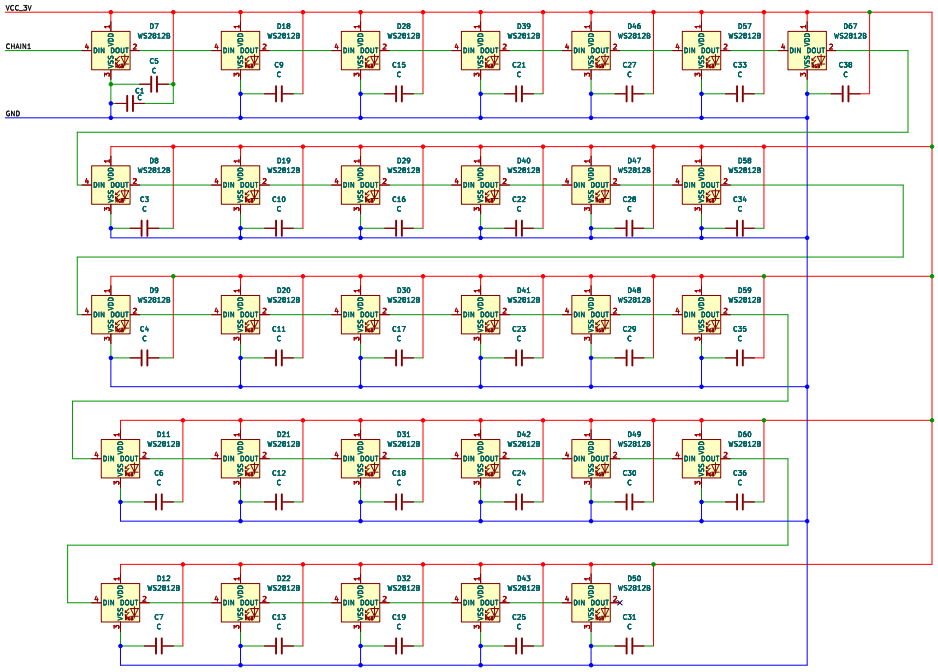

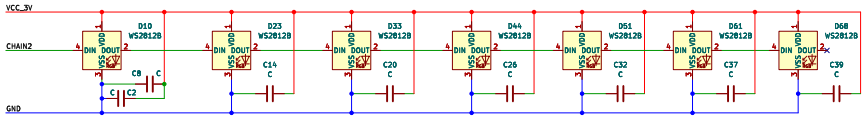

Sheet: /left/
File: left.kicad_sch

Title:

Size: A2	Date:	Rev:
KiCad E.D.A. 9.0.7		Id: 2/3

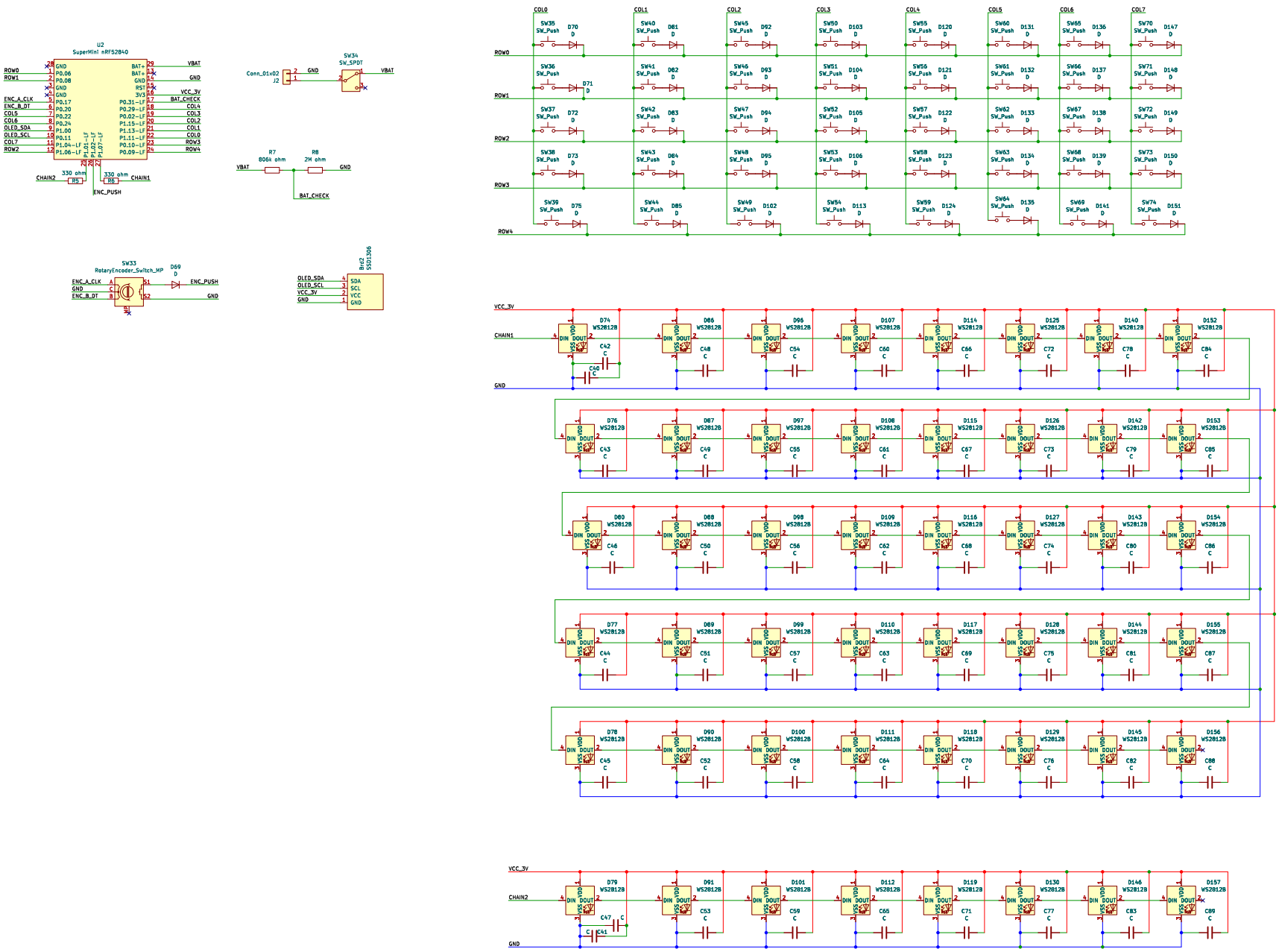

Sheet: /right/	
File: right.kicad_sch	
Title:	
Size: A2	Date:
KiCad E.D.A. 9.0.7	Rev:
	Id: 3/3